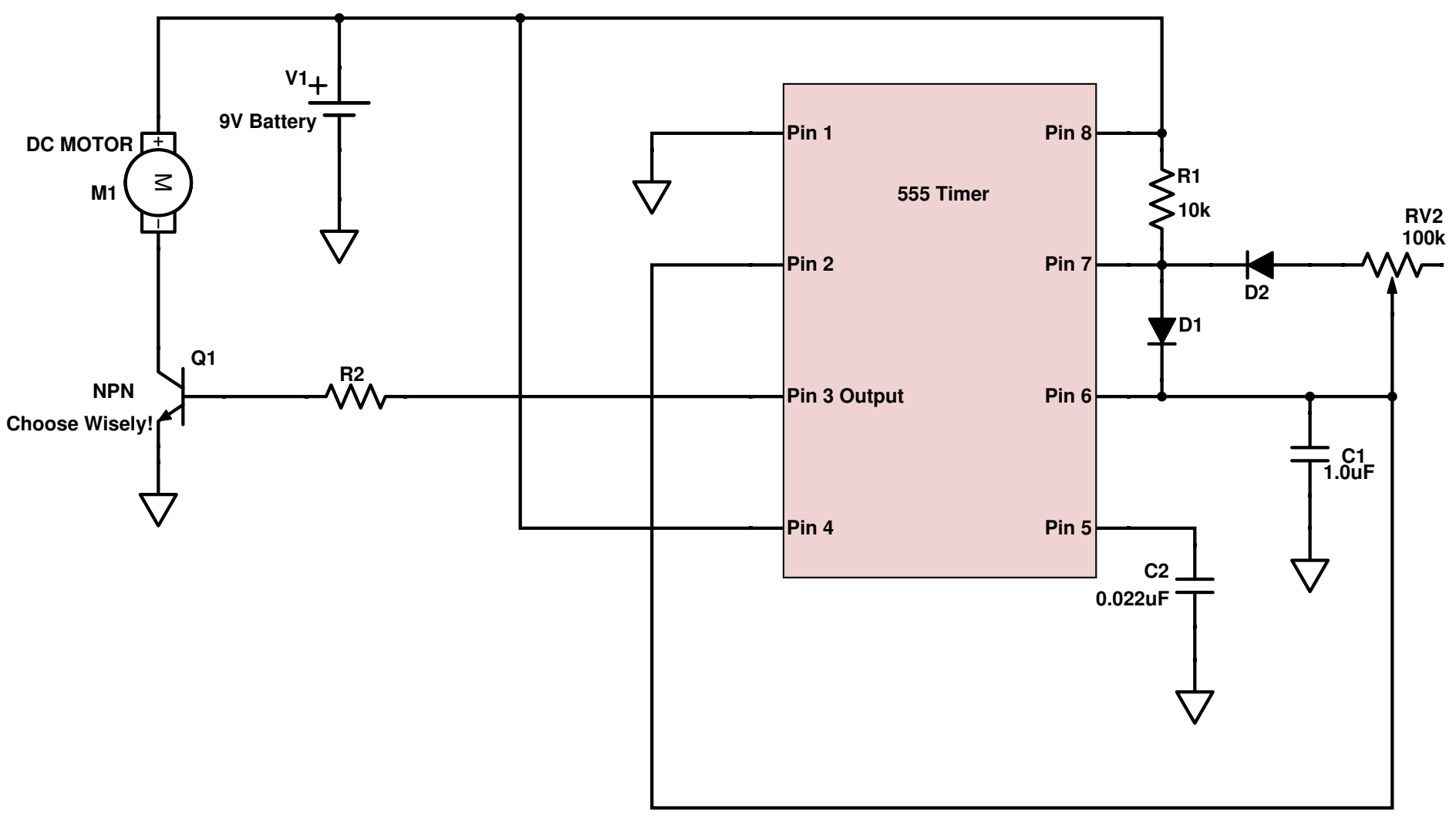
V1
9V Battery
DC MOTOR
M1
Q1
NPN
Choose Wisely!
R2
Pin 1
Pin 2
Pin 3 Output
Pin 4
555 Timer
Pin 8
Pin 7
Pin 6
Pin 5
R1
10k
D1
D2
RV2
100k
C1
1.0uF
C2
0.022uF